Mud Monster All Parts Manual

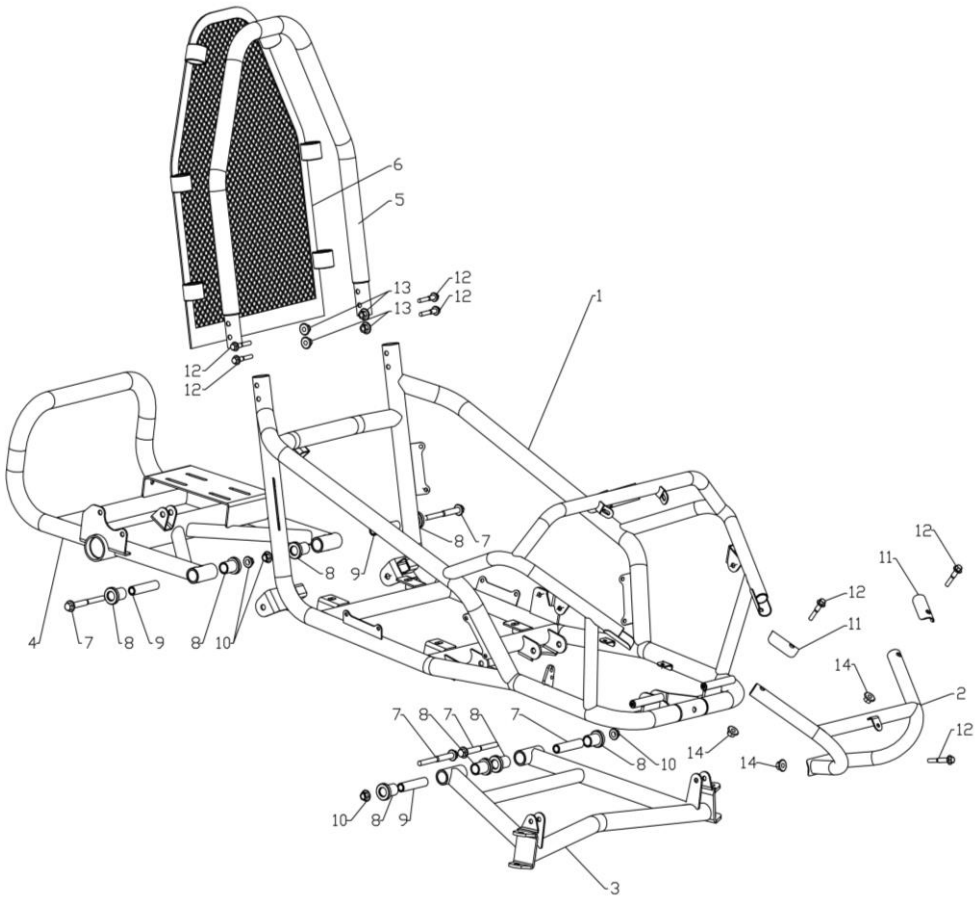

No.	Part Number	Name	Qty	Remark
1	41000-15600	Main Chassis	1	
2	84200-15600	Front Bumper	1	
3	52300-15600	Front Swing Arm	1	
4	61100-15600	Rear Swing Arm	1	
5	49100-15600	Roll Bar	1	
6	49200-15600	Safty Net	1	
7	GB 5787 - 1986	Bolt	4	
8	52311-15600	Brushing	8	
9	52312-15600	Inner Spears	4	
10	GB /T 6183.1 - 2000	Lock Nut	4	
11	84221-15600	Mounting Plate	2	
12	GB 5787 - 1986	Bolt	6	
13	GB /T 923 - 2009	Nut	4	
14	GB /T 6183.1 - 2000	Nut	3	

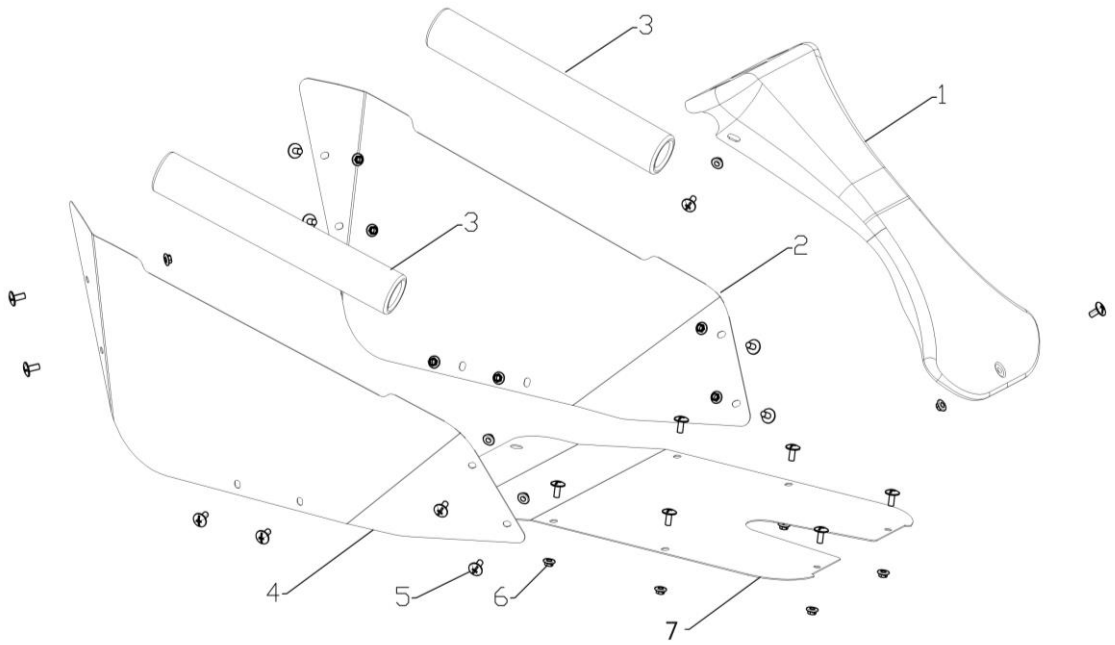

No.	Part Number	Name	Qty	Remark
1	47610-15600	Front Cover	1	
2	47110-15600	Left Side Plate	1	
3	47112-15600	Side Tube Protector	2	
4	47120-15600	Right Side Plate	1	
5	GB 973 - 1976	Screw (M6*12)	21	
6	GB /T 6187.1 - 2000	Nut M6	21	
7	47410-15600	Floor	1	
8	49910-15600	SEAT BELT ASSY	1	
9	37110-15600	SWITCH IGNTION	1	

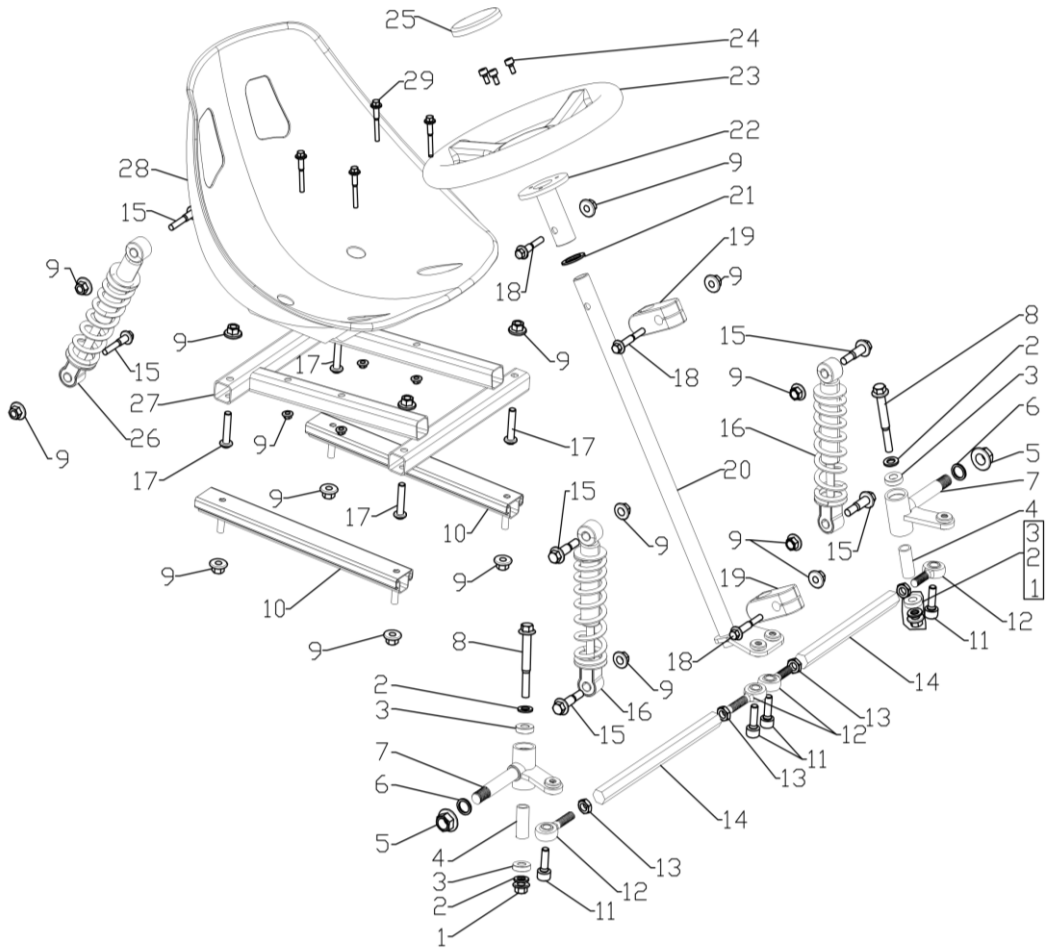

No.	Part Number	Name	Qty	Remark
1	GB /T 6183.1 - 2000	Lcok Nut M10	2	
2	GB 97 - 1976	Washer 10*15*1.5	4	
3	GB/T 276-1994	Bearing 609ZZ	4	
4	52421-15600	Inner Spacer10*14*34	2	
5	GB /T 6183.1 - 2000	Lcok Nut M14	2	
6	GB 97 - 1976	Washer 14*20*2	2	
7	52401-15600	Right Spindle	1	
7.1	52402-15600	Left Spindle	1	
8	GB 5787 - 1986	Flange Blot（M10*75)	2	
9	GB /T 6183.1 - 2000	Lcok Nut M8	21	
10	49310-15600	Seat Slide	1	
11	GB /T 70.1 - 2008	Bolt （M10*30)	4	
12	GB/T 9161—2001	Heim Joint(Left Thread)	2	
12.1	GB/T 9161—2001	Heim Joint(Right Thread)	2	
13	GB /T 41 - 2000	Nut M8(Left Thread)	2	
13.1	GB /T 41 - 2000	Nut M8(Right Thread)	2	
14	54331-15600	Steering Rod	2	
15	GB 5787 - 1986	Flange Blot（M8*35)	6	
16	52100-15600	Front Shcock	2	
17	GB /T 70.2 - 2000	Blot （M8*45）	4	
18	GB 5787 - 1986	Flange Blot（M8*50)	2	
19	27221-15600	Steering Shaft Mount	2	
20	27210-15600	Steering Shaft	1	

21	GB 97 - 1976	Washer 20*30*2	1	
22	27220-15600	Steering Wheel Mount	1	
23	27203-15600	Steering Wheel	1	
24	GB /T 70.1 - 2008	Screw （M6*12)	3	
25	27204-15600	Steering Wheel Cap	1	方向盘自带
26	62100-15600	Rear Shock	1	
27	49310-15600	Seat Mounting	1	
28	49320-15600	Seat	1	
29	GB 5787 - 1986	Flange Blot（M8*45)	4	

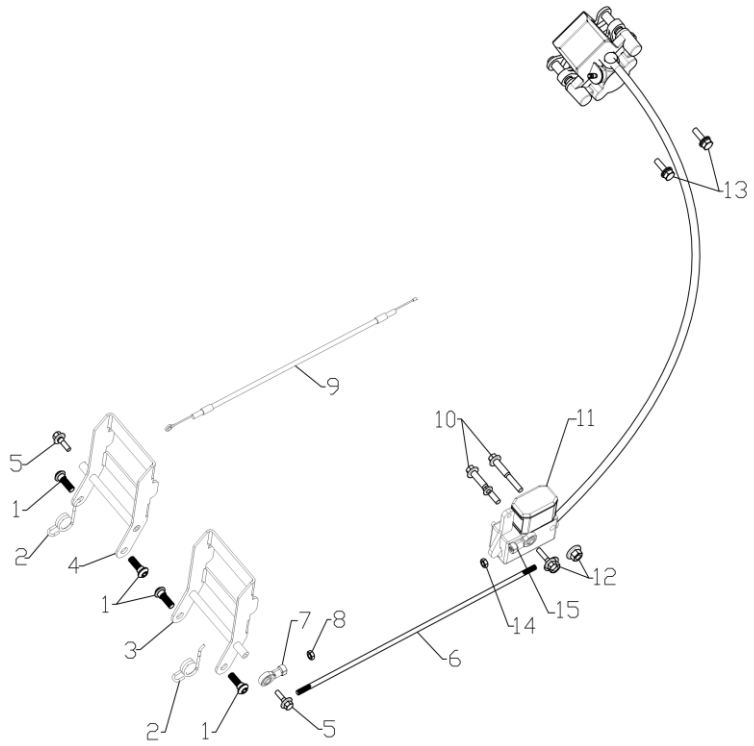

No.	Part Number	Name	Qty	Remark
1	DIN 923 - 2012	Step Bolt(M8*15)	4	
2	28813-15600	Spring	2	
3	28810-15600	Brake Pedal	1	
4	28710-15600	Throttle Pedal	1	
5	GB 5787 - 1986	Flange Blot（M6*20)	2	
6	28811-15600	Brake Rod	1	
7	GB/T 9161—2001	Heim Joint M6	1	
8	GB /T 41 - 2000	Nut M6	1	
9	58310-15600	Throttle Cable	1	
10	GB 5787 - 1986	Flange Blot（8*40)	2	
11	59710-15600	Brake Assm	1	
12	GB /T 6183.1 - 2000	Lcok Nut M8	2	
13	GB /T 9074.17 - 1988	Bolt set （M8*20)	2	
14	GB /T 41 - 2000	Nut M6 （Right Thread）	1	
15	GB/T 9161—2001	Heim Joint M6（Right Thread）	1	

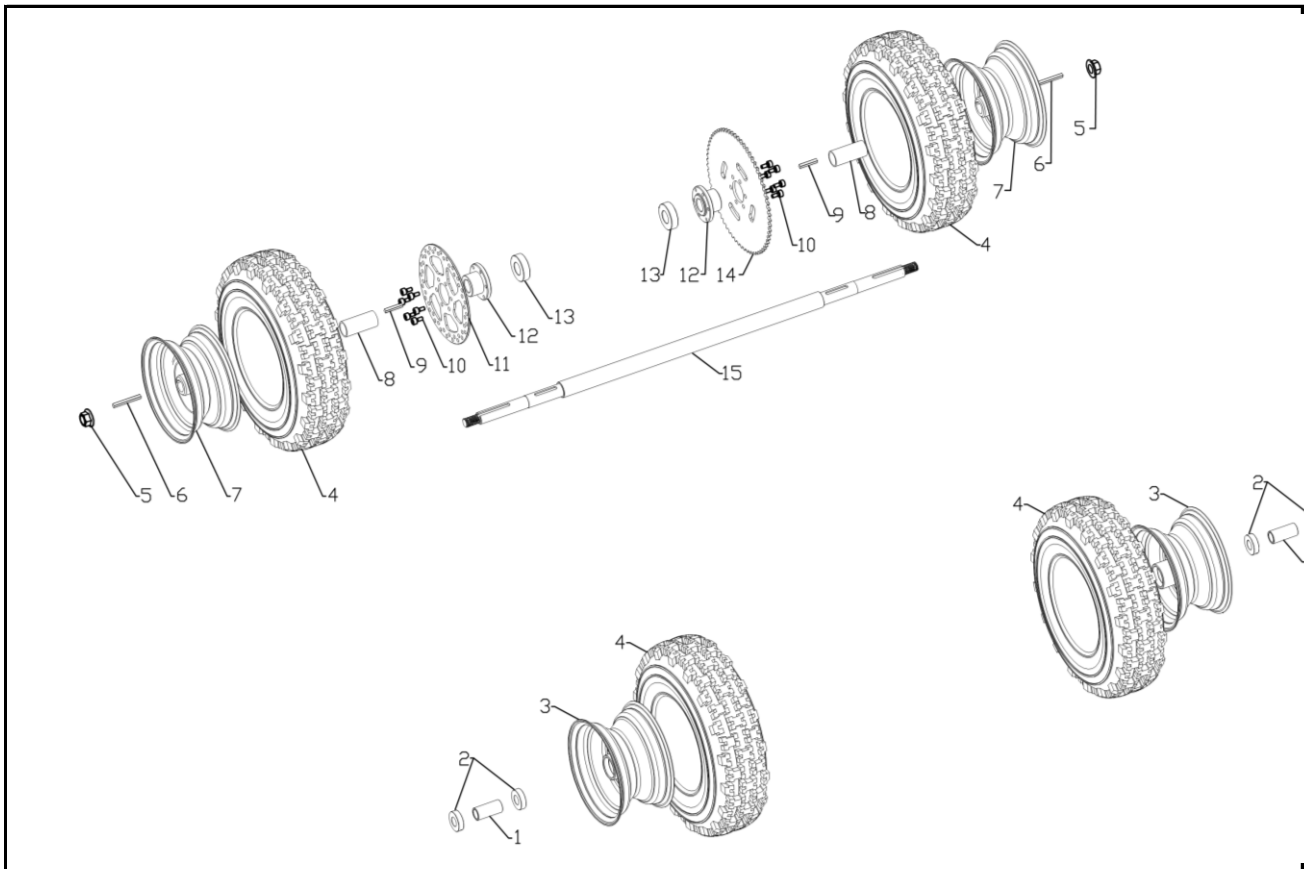

No.	Part Number	Name	Qty	Remark
1	54113-15600	front Wheel Inner Spacer	2	
2	GB/T 276-19941	Bearing 6002	4	
3	54100-15600	Front Rim	2	
4	55100-15600	Trie 13*5.0-6	4	
5	GB /T 6183.1 - 2000	Lcok Nut M14	2	
6	GB /T 1096 - 2003	Pin 5*5*45	2	
7	64100-15600	Rear Rim	2	
8	27112-15600	Rear Shaft Spacer	2	
9	GB /T 1096 - 2003	Pin 5*5*35	2	
10	GB /T 70.1 - 2008	Screw(M6*12)	12	
11	59610-15600	Brake Disc	1	
12	59620-15600	Hub	2	
13	GB/T 276-1994	Bearing 6004RS	2	
14	64530-15600	Sprocket 65T	1	
15	27100-15600	Rear Axle	1	

ELECTRIC PARTS ONLY

No.	Part Number	Name	Qty	Remark
1	GK008E-1	Brushless Motor	1	
2	GK008E-2	Sprocket 14T	1	
3	GK008E-3	Sprocket 26T	1	
4	GK008E-4	Chian （420H-50Link)	1	
5	GK008E-5	Controller	1	
6	GK008E-6	Controller Box	1	
7	GK008E-7	Throttle Pedal （Electric）	1	
8	GK008E-8	Battery Box（48V20AH）	1	

9	GK008E-9	Battery （12V20AH）	4	4 x 20Ah Batteries
10	GK008E-10	Battery Box（48V12AH）	7	12Ah Only (do not order)
11	GK008E-11	Battery （12V12AH）	4	12Ah Only (do not order)
12	GK008E-12	Battery Charger	1	
13	GK008E-13	Battery Wire	1	
14	GK008E-14	Switch （Forward Reverse）	1	
15	GK008E-15	Switch （Speed）	1	
16	GK008E-16	Brake Switch	1	
17	GK008E-17	Battery tie-wrap	2	
18	GK008E-18	Battery Charger Port	1	