## AGA11_A

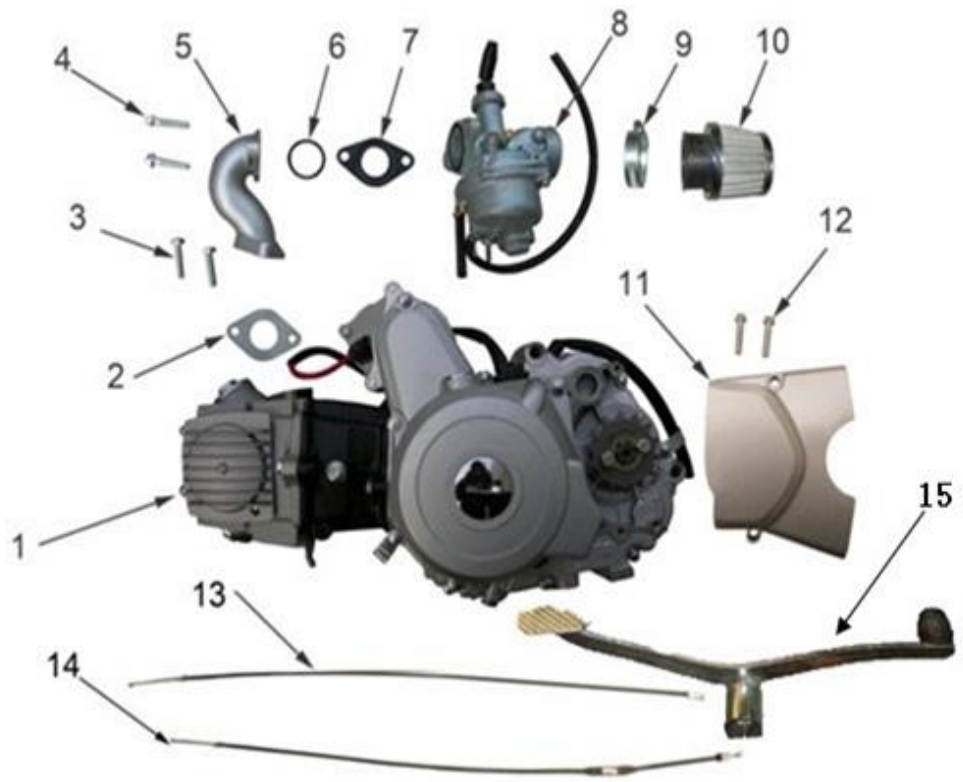


| | | |
|---|---|---|
| 211017011002 | 兴锋弘汽油机_亚光黑色 | Engine 125cc |
| 251096001001 | 进气管纸垫 | Intake manifold gasket Φ21.5 |
| 401001009002 | 六角法兰面螺栓 | Bolt M6X20 |
| 401001011002 | 六角法兰面螺栓 | Bolt M6X25 |
| 301005028002 | 进气管 | Intake Manifold ZJ43 |
| 251097001001 | 进气管O型圈 | Intake Manifold O-ring Φ21.5 |
| 251099001001 | 进气管橡胶垫 | Intake Manifold rubber washer |
| 301014098001 | 化油器_喷砂钝化本色 | Carburetor PZ19 |
| 301034003001 | 空气滤清器抱箍_不锈钢 | Air filter assy hoop 32-44 |
| 301021025001 | 空气滤清器_白色 | Air filter assy 45 φ35 |
| 259577001001 | 左边盖 | Left engine cover AGA-2 |
| 401001011002 | 六角法兰面螺栓 | Bolt M6X25 |
| 310014008001 | 风门线 | Choke cable 738x800 : 62 |
| 310013032001 | 油门线 | Throttle cable 715x780 : 65 |
| 301001011001 | 挂档杆 | Gear shift AGA-2 |

## AGA11_B

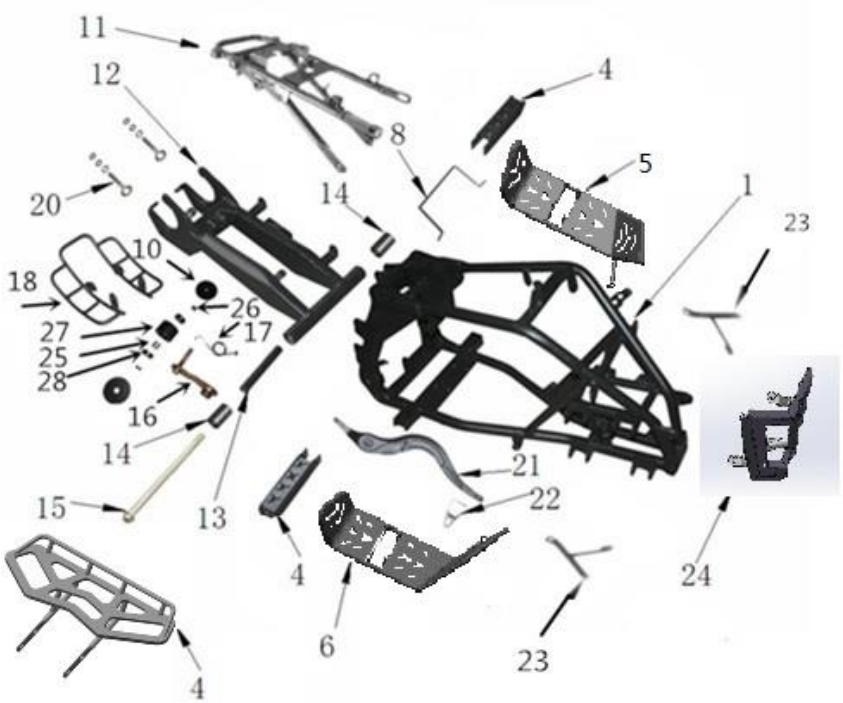


| | | |
|---|---|---|
| 303002084004 | 车架 | Frame AGA-2A |
| 303010007001 | 脚蹬 | Foot-pegs left AGA-2A |
| 303010020001 | 整体式踏脚左_喷塑磨砂黑 | Right foot-pegs support AGA-2A |
| 303010021001 | 整体式踏脚右_喷塑磨砂黑 | Left foot-pegs support AGA-2A |
| 303047002002 | 电池盒抱箍 | Battery box hoop |
| 303068001002 | 张紧轮挡圈_喷塑黑色 | Roller ₵44X₵8X2 |
| 303006183005 | 后尾架 | Subframe |
| 306005064001 | 后平叉 | Rear swing arm AGA-2A |
| 319001267001 | 后平叉隔套 | Rear swing arm axle spacer ₵12X₵16X130 |
| 319019008001 | 后叉缓冲套 | Silentbloc rear swing arm φ12Xφ24X42 |
| 401002060002 | 六角法兰面螺栓细牙小系列_镀彩锌 | Rear swing arm axle M12X1.25X280mm |
| 303057003002 | 链条张紧轮支架_镀彩锌 | Roller chain bracket |
| 319007007001 | 链条张紧轮扭簧_镀彩锌 | Roller chain spring |
| 306011002001 | 后桥保护架 | Rear sprocket protect AGA-2A |
| 318001003001 | 后刹油管卡扣 | rear brake tube holder |
| 306006019001 | 后千斤 | Chain tensioner φ12X60-M8 |
| 310031019001 | 后刹踏杆 | Rear brake lever AGA-2A |
| 310032002003 | 后刹踏杆铝头 | Rear brake lever tip APL-1 |
| 303080006001 | 大灯支架左右 | Front light bracket |
| 303074022001 | 前保险杠 | Front bumper AGA-11 |
| 319001115001 | 衬套_镀彩锌 | Roller chain spacer ₵9X₵12X12mm |
| 319001082001 | 衬套_镀彩锌 | Roller chain spacer ₵8.5X₵11X4mm |
| 311005001001 | 链条张紧轮_黑色 | Roller chain |
| 409002023001 | 深沟球轴承_镀锌本色 | Roller chain bearing 608ZZ |
| **AGA11_C** | | |

| | | |
|---|---|---|
| 305012005005 | 上摇臂左 | Upper swing arm AGA-2A LEFT |
| 305012014005 | 上摇臂右 | Upper swing arm AGA-2A RIGHT |
| 319019010001 | 摇臂缓冲套 | Swing arm nylon spacer ¢10.5X¢23X40 |
| 401002022001 | **外六角法**兰面螺栓 | Bolt M10X60mm_8.8 |
| 305018002001 | **上**摇臂球头 | Upper left swing arm joint AGA-2A 60mm |
| 305013005001 | **下**摇臂 | Bottom swing arm AGA-2A |
| 404007004002 | **非金属嵌件六角**锁紧螺母细牙_镀彩 | Bolt M16X1.5(GB/T 6183.2) |
| 404010002002 | **六角薄螺母**细牙_镀彩锌 | Bolt M16X1.5(GB/T 6183.2) |
| 305015004001 | 转向节左 | Left knuckle AGA-2A |
| 305015003001 | 转向节右 | Right knuckle AGA-2A |
| 305016005001 | 转向拉杆 | Ball joint lever 250mm |
| 310023014001 | **方向柱** | Steering stern AGA-2A |
| 319018010001 | **油封** | Washer ¢20X¢32X7mm |
| 409002020001 | **深沟球**轴承 | Sterring stem bearing |
| 319002031001 | **方向柱**衬套 | Spacer steering stem AGA-2A |
| 310039003001 | 方向柱锁扣 | Raisers |
| 319001265001 | **方向柱**锁扣衬套 | Spacer ¢10.5X¢14X41.5 |
| 401002019001 | **外六角法**兰面螺栓 | Bolt M10×55 |
| **AGA11_D** | | |

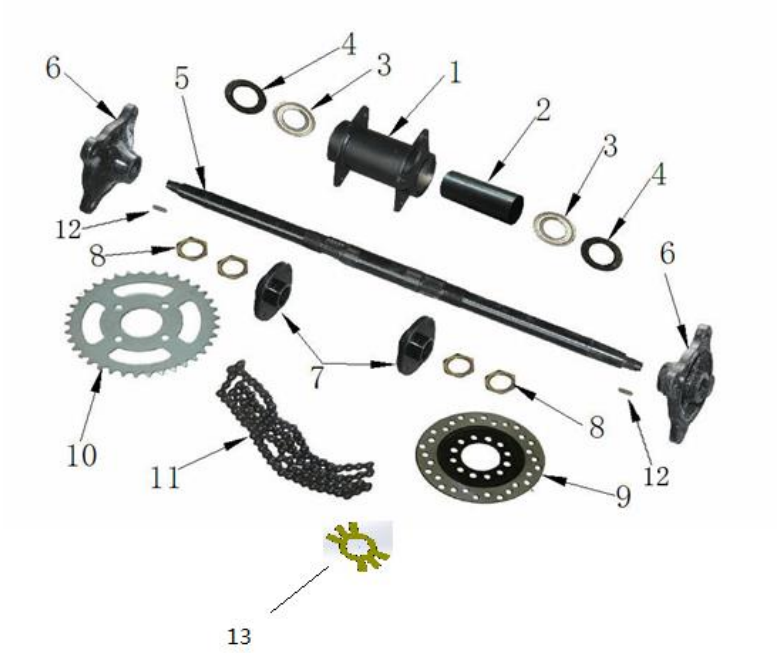


| | | |
|---|---|---|
| 306012001001 | 后桥筒体 | Rear axle cover AGA-2A |
| 319001269001 | 后桥衬套 | Rear axle spacer ₵35X94.5 |
| 409002031001 | 深沟球轴承（后桥轴承） | Rear axle bearing GB/T 276_6006 |
| 319018012001 | 后桥油封 | Rear axle dust seal ₵35X₵55X8 |
| 306013004001 | 后桥轴 | Rear axle AGA-2A 745mm - M16X1.5 |
| 306014003001 | 后轮法兰座 | Axle rim bracket AGA-2A M10X110mm |
| 306014006001 | 碟刹盘(链轮盘)安装座_电泳黑色 | Rear sprocket / disc brake bracket |
| 404002002002 | 六角螺母 | Nut M27X1.5 |
| 308004017001 | 后碟刹盘 | Rear brake disc 160X3.5 |
| 311003044002 | 后链轮 | Sprocket 420-37T |
| 311001047001 | 链条 | Chain 420-92 |
| 408001001001 | 平键 | Pin AGA-2A_5x30 |
| 318017005001 | 止退片_镀彩锌 | locking washer |
| **AGA11_E** | | |

| | | |
|---|---|---|
| 305011002002 | 前减震器 | Front shock AGA-2_￠7X320mm |
| 306001061001 | 后减震器 | Rear shock AGA-2_φ9X275mm |
| 305011001001 | 气囊前减震 | Airbag front shock AGA-2 ￠7X320mm |
| 306001068001 | 气囊后减震 | Airbag rear shock AGA-2_￠8.5X275mm |
| 401001003001 | 六角法兰面螺栓-加大系列-B级_镀彩 | Bolt M10X1.25X45-F_8.8 (GB/T5789) |
| 404005003002 | 细牙全金属六角法兰面锁紧螺母_镀 | Locknut M10X1.25(GB/T 6187.2) |
| **AGA11_F** | | |

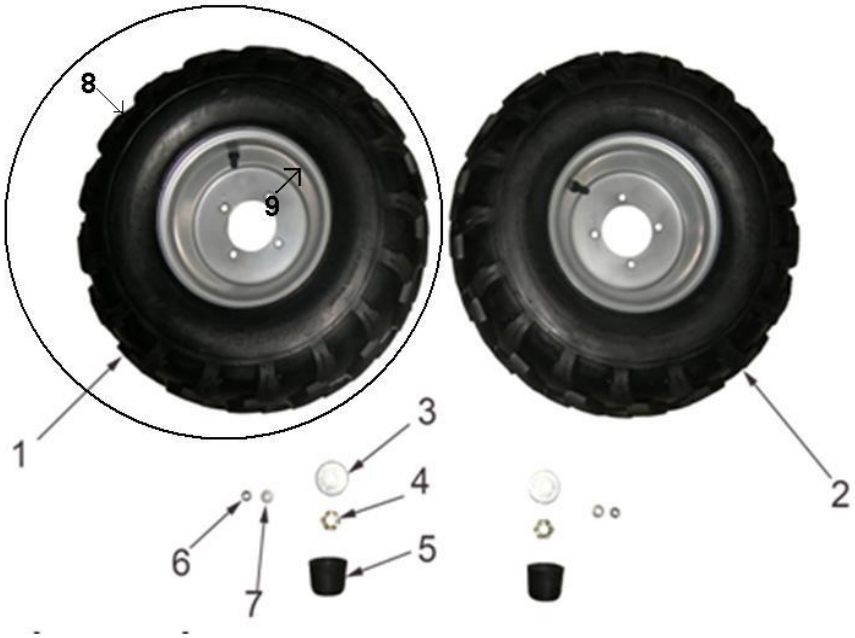


| | | |
|---|---|---|
| 307001116001 | 豪润左前轮_黑色 | front wheel L. 19X7.00-8 |
| 307001117001 | 豪润右前轮_黑色 | front wheel R. 19X7.00-8 |
| 319014005001 | 轮轴防尘套_本色 | dustproof washer |
| 404011004001 | 六角开槽薄螺母细牙A和B级_镀彩锌 | notch nut |
| 319014007001 | 轮轴防尘套_本色 | dustproof cap |
| 404006005003 | 非金属嵌件六角锁紧螺母_镀彩锌 | locknut |
| 405006049002 | 平垫圈_镀彩锌 | washer |
| 307006021001 | 豪润前轮胎_黑色 | Front tyre |
| 307003036002 | 前轮毂_黑色 | Front rim |
| **AGA11_G** | | |

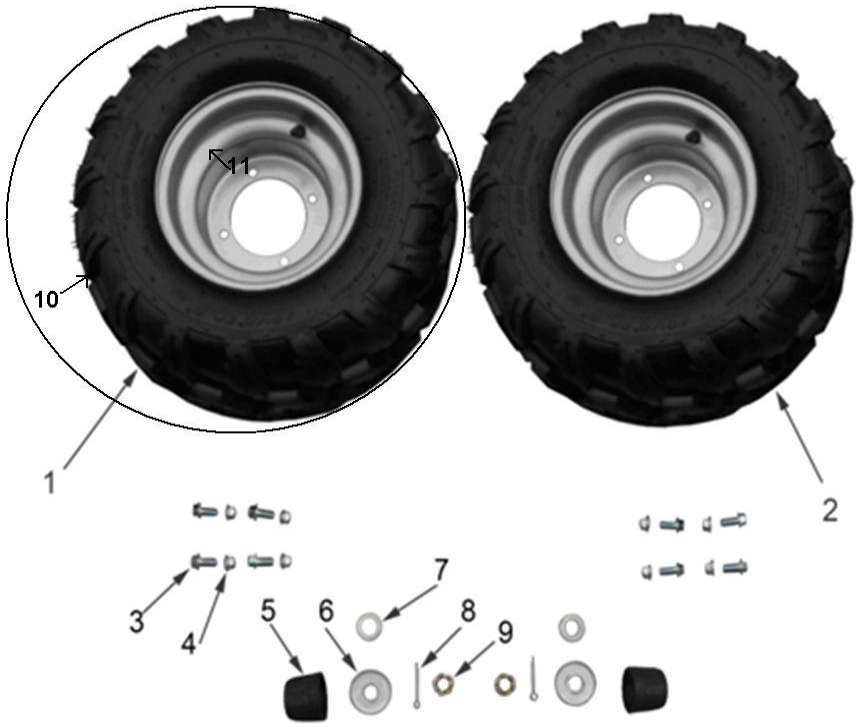


| | | |
|---|---|---|
| 307002113001 | 豪润左后轮_黑色 | rear  wheel L. 18X9.5-8 |
| 307002114001 | 豪润右后轮_黑色 | rear wheel R. 18X9.5-8 |
| 401002016001 | **六角法**兰面螺栓细牙小系列_镀彩锌 | Bolt M10X1.25X25-F_8.8级(GB/T 5789) |
| 404005003002 | 细牙全金属六角法兰面锁紧螺母_镀 | Locknut M10X1.25(GB/T 6187.2) |
| 319014007001 | 轮轴防尘套_**本色** | dustproof cap |
| 319014005001 | 轮轴防尘盖-铁_镀彩锌 | dustproof washer 16Xφ47X0.8 |
| 405006022002 | **平**垫圈_镀彩锌 | Washer ₵16X₵30X2.5 |
| 407005006002 | **开口**销_镀锌 | Needle ₵2.5X40mm(GB/T 91-2000) |
| 404011005002 | **六角开槽薄螺母**细牙A和B级_镀彩锌 | Notch nut M16X1.5(GB/T9459) |
| 307006114001 | **豪**润后轮胎_**黑色** | Rear tyre 18X9.5-8(240/50-8) |
| 307004034002 | **后**轮毂_**黑色** | Rear rim 180X95-8 |
| **AGA11_H** | | |

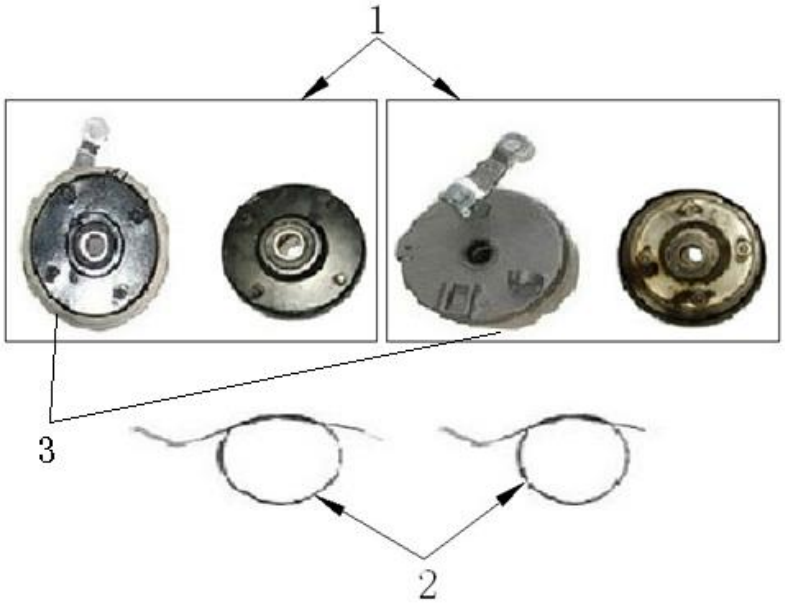


| | | |
|---|---|---|
| 309001005002 | 左前制动器_喷砂本色 | Front drum brake left |
| 310016010001 | 前毂刹线_黑色 | Drum brake cable 1160mm/90mm |
| 309004003001 | 前鼓刹摩擦片_本色 | Front drum pad |
| **AGA11_I** | | |

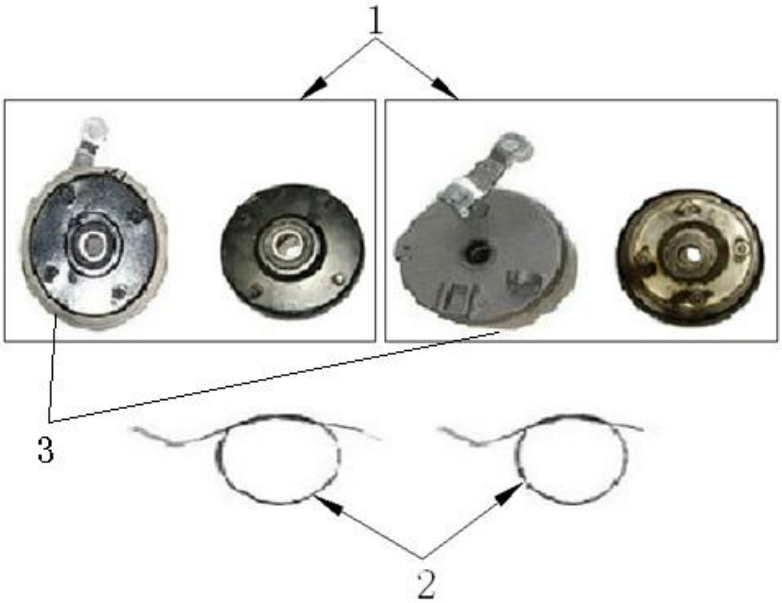


| | | |
|---|---|---|
| 309001003002 | 右前制动器_喷砂本色 | Front drum brake right |
| 310016010001 | 前毂刹线_黑色 | Drum brake cable 1160mm/90mm |
| 309004003001 | 前鼓刹摩擦片_本色 | Front drum pad |
| **AGA11_J** | | |

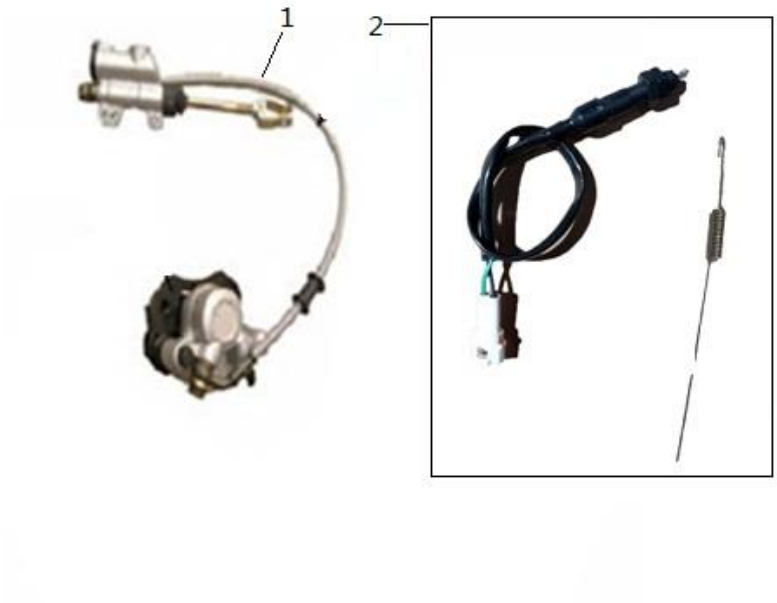


| | | |
|---|---|---|
| 308003051001 | 后碟刹器 | Rear brake assy AGA-2 110mm 500mm |
| 316005003001 | 后刹开关_黑色 | Brake level switch |
| 308009034001 | 后碟刹摩擦片_本色 | Disc Brake Pad AGA-2 |
| **AGA11_K** | | |

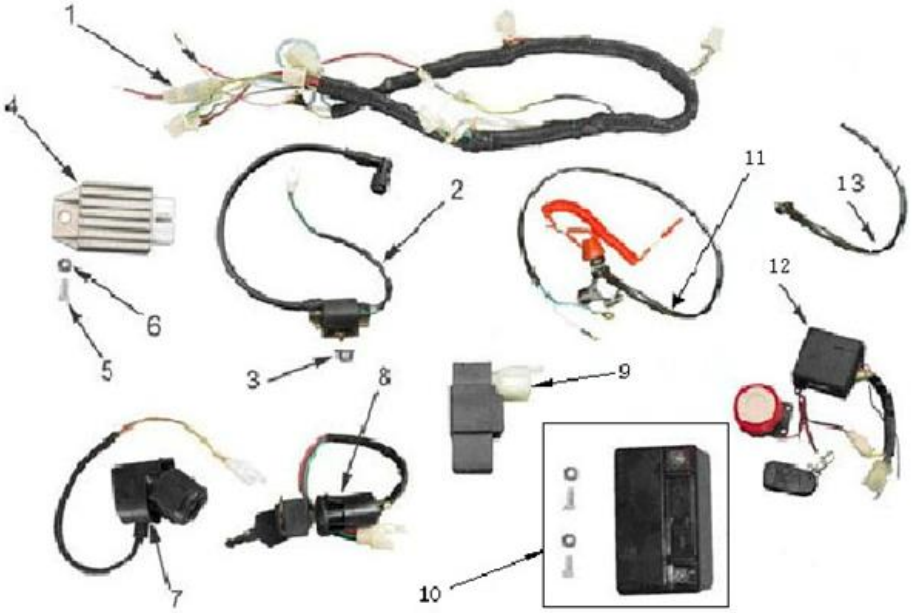


| | | |
|---|---|---|
| 315007062001 | 主电缆 | Wiring Harness AGA-11 |
| 315003029001 | 高压包 | Ignition coil 12V |
| 404004001003 | 法兰锁紧螺母 | Locknut M6 |
| 315002004002 | 整流器 | Rectifier 12V |
| 401001007002 | 外六角法兰面螺栓 | Bolt M6X16 |
| 404004001003 | 法兰锁紧螺母 | Locknut M6 |
| 315005004001 | 继电器 | Starting AGA-2 12V |
| 316008007001 | 电门锁 | Key ignition |
| 315001016001 | CDI点火器 | CDI 12V |
| 315006005001 | 蓄电池 | Battery 12V5Ah |
| 316004006001 | 紧急熄火开关 | Safety kill switch |
| 316012005002 | 防盗报警器 | alarm remote |
| 316005003001 | 后刹开关_黑色 | Brake level switch |
| **AGA11_L** | | |

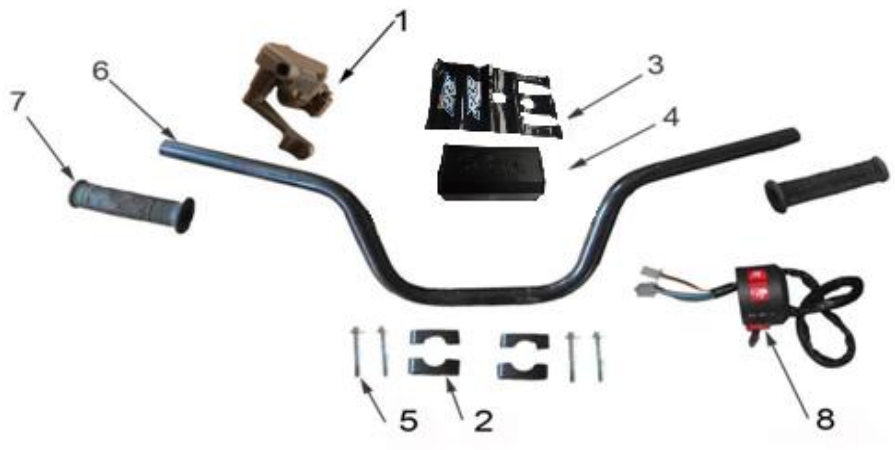


| | | |
|---|---|---|
| 310007015001 | 双刹油门座 | Thumb throttle AGA-2 |
| 310019019001 | 方向把卡座_黑色 | Handlebar risers AGA-3 |
| 320052106001 | 装饰套_黑色 | Sponge cover ¢11X¢48X210mm |
| 304035009002 | 海绵套_黑色 | Cross bar sponge |
| 401001036002 | **六角法**兰面螺栓-**加大系列**-B级_镀彩 | Bolt M8X1.25X60 (GB/T5789) |
| 310001054001 | 方向把 | Handlebar AGA-6 22mm-2.5mm 740±5mm |
| 310003024003 | 手把套 | Handle grips AGA-2 L=115 |
| 316001011001 | 左开关组件 | Left function controller AGA-2 |
| **AGA11_M** | | |

| | | |
|---|---|---|
| 312001016001 | 油箱 | Fuel tank AGA-2 |
| 312002023001 | 油箱盖_黑色 | Fuel cap AGA-2 (37-4) |
| 319005003001 | 钢带环箍卡扣 | Hose clamp 9X8X0.8 |
| 312004001001 | 油管 | Fuel hose 100mm+80mm+120mm |
| 312003005001 | 汽油滤清器 | Fuel filter |
| 312005005001 | 油开关 | Pet-cock 29 |
| **AGA11_N** | | |

| | | |
|---|---|---|
| 304044008014 | 前车体 | Front plastic body Sniper AGA-2 |
| 304043014012 | 后车体 | Rear plastic body Sniper AGA-2 |
| 304003004012 | 前右侧板 | Front side cover right AGA-2 |
| 304002003012 | 前左侧板 | Front side cover left AGA-2 |
| 313001039001 | 座垫 | Seat AGA-2 |
| 316013068001 | 前大灯 | Diamond headlight 12V35W/35W_5W |
| 316020021001 | 后尾灯 | Tail light LED AGA-11 |
| 318006010001 | 回复反射器(反光片)_红色 | Reflector 202M612 |

**AGA11_O**

| | | |
|---|---|---|
| 302001046002 | 排气消声器 | Exhaust muffler AGA-2 |
| 302004001001 | 排气管接口垫_本色 | Exhaust pipe gasket 50,70,110,125cc |
| 404008004002 | 自锁螺母 | Locknut M6 |

|

|

|