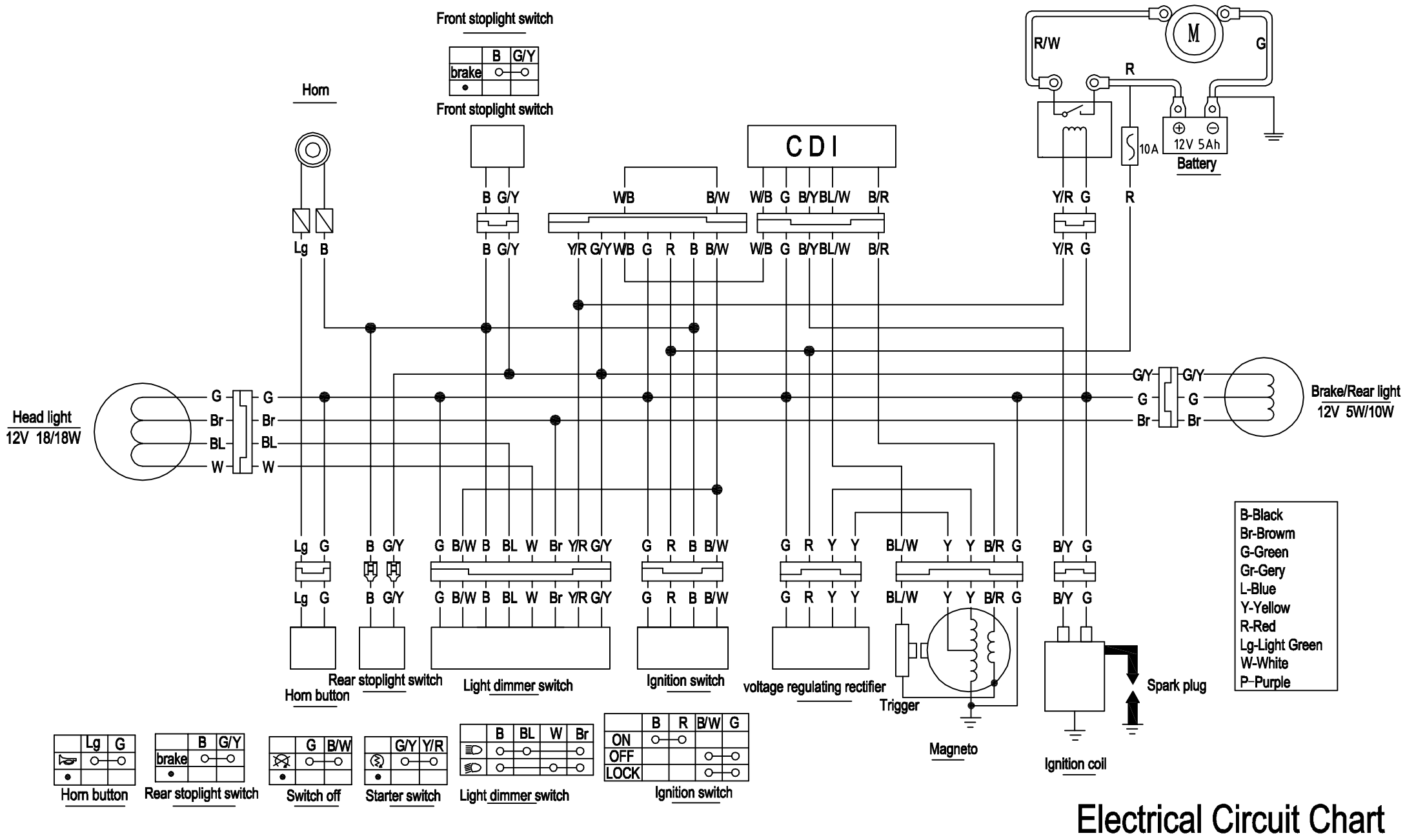

Electrical Circuit Chart